Laboratory 10

Stopwatch Control Unit

10.1 Outcomes and Objectives

The outcome of this lab is to design and simulate a control unit to control the datapath that stores and manipulates the information needed to run a stopwatch. Through this process you will achieve the following learning objectives.

- Using a timing diagram to specify or verify the proper operation of a Finite State Machine
- Design a control word table and specify the control word values for every state.
- Creating a Do file to automate waveform setup
- Definition of Finite State Machines in Verilog

10.2 Stopwatch

From the previous lab, you should be familiar with the operation of our stopwatch. Briefly, our stopwatch allows a user to measure elapsed time and lap times of a competitive events. It measures time in increments of a tenth of a second, unit second and tens of seconds. Control input comes from 2 buttons, called `S1` and `S2`, according to the incomplete finite state machine (FSM) shown in Figure 10.1.

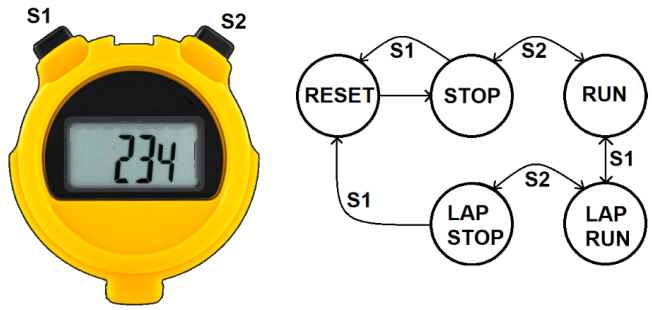

Figure 10.1: A digital stopwatch gets its input from 2 buttons and displays its output on a 7-segment display. The behavior of the stopwatch can be described by this finite state machine (FSM).

There are two reasons that the FSM shown in in Figure 10.1 is incomplete, it does not reflect the logic level of the buttons on the FPGA development board nor does it account for the time the user holds the `S1` and `S2` buttons down.

Figure 10.2 shows the schematic of the buttons (`key1` ...`key4`) on the C5G development board that you will use to control the operation of the stopwatch; the `S1` and `S2` buttons in Figure 10.1. The buttons shown in the schematic are in their nominal position – not being pressed by a user. You should note that the contacts of each button (open circles) are disconnected. This leaves the right side of the button connected to `VCC` through a resistor as well as the Altera FPGA. This resistor is called a pull-up resistor, and as its name implies, pulls the voltage on the right side of the push button up to `VCC` – logic `1`. When a button is pressed, the contacts are connected and the right side of the push button is connected directly to ground, forcing the voltage on the respective FPGA pin to logic `0`.

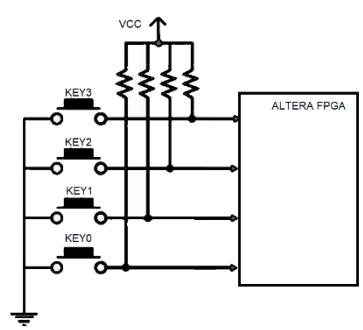

Figure 10.2: FPGA development board buttons used to operate the stopwatch.

To summarize the operation of the buttons shown in Figure 10.2. When a user presses a button, the value on the respective FPGA pin is logic `0`. When a button is not pressed, the logic level of the corresponding FPGA pin is logic `1`.

You will explore the reason that effect of the user holding down a button in the next section which introduces you to the finite state machine that governs the behavior of your stopwatch.

10.3 Module: stopWatchControl

The design of the stopwatch controller starts with the state diagram, then on to the control word values for each state, and then finally to the Verilog code needed to implement the state diagram and control word. Each of these steps is outlined below.

State diagram for stopWatchControl

The state diagram for the stopwatch is shown in Figure 10.3.

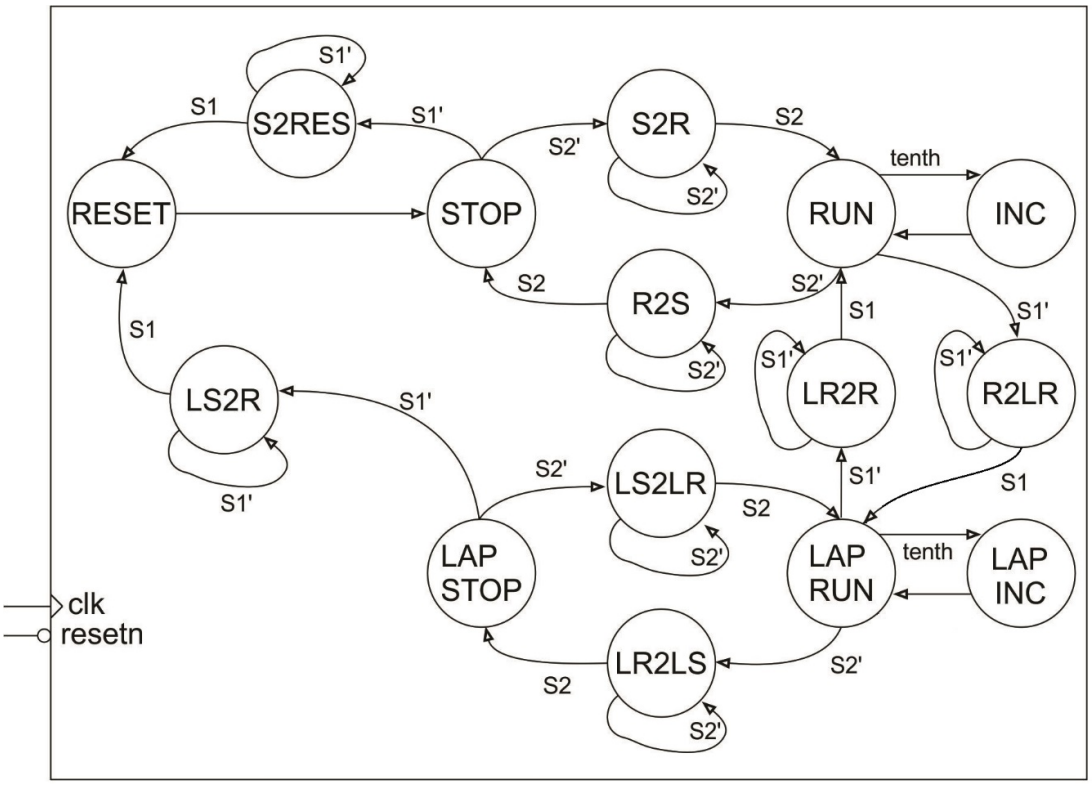

Figure 10.3: The control unit for the stopwatch needs to account for the time the user holds the button down.

The arcs between states are labeled with a Boolean condition, which when true, causes the FSM to make that transition. So for example, if the FSM is in the RUN state and the `S2` button is pressed (buttons output `0` when pressed hence the arc labeled `S2'`), the FSM will transition to the `R2S` state (and stay there as long as the button is held down). When a number "2" appears in the middle of a state name, the number denotes the word "to" which is intended to mean moving from one state to another. The abbreviated names of the source/destination states are written on left/right side of the number "2" respectively. So for example, the state `R2S` stands for Run to Stop.

These intermediate states are needed because the action of a user pressing a button takes a long time from the perspective of the 50MHz clock on the FPGA development board. For example, consider the incorrectly designed FSM shown in Figure 10.4. The intention of this

design is to have the FSM transition from the `STOP` state to the RUN state when the user pressed the button `S2` (remember that when `S2` is pressed it outputs a logic `0`, hence the arc labeled `S2`'). What actually happens is that the FSM rapidly toggles between the `STOP` and `RUN` states at 50MHz while the `S2` button is held down. When the user releases the `S2` button there is a 50/50 chance that the FSM will end-up in the `STOP` or `RUN` state.

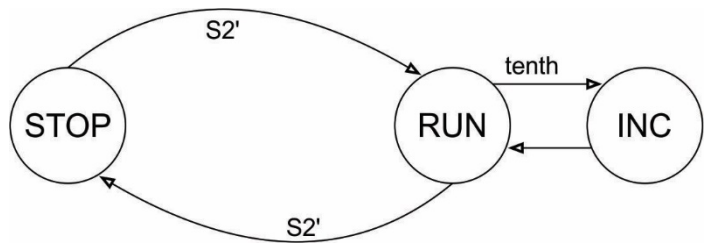

Figure 10.4: An improperly constructed FSM for the stopwatch.

Control word for stopWatchControl

Before you dive into writing the Verilog code for the control unit, you need to complete Table 10.1, the control word value for each state. You have already completed some of these control words in the previous lab. Most of the new states are the states with "2" in them. We will call these "transitional states" because they move the control unit between stopwatch modes. When writing the control words in Table 10.1 you must follow the following two rules.

1) Assign the cw[5] bit for transitional states the same value as the cw[5] value for the destination state. So for example in the `R2LR` state, set cw[5] to `1` because the cw[5] value in the destination state, `LAPRUN`, is `1`.
2) Only have the timer counter counting up while the control unit is in the `RUN` or `LAPRUN` states. We don't want the timer counting up in intermediate states because these states do not have an "INC" associated with them, and as a consequence, the tenth pulse from the timer counter would most likely be missed.

Table 10.1: Control word table for the stopwatch finite state machine shown in Figure 10.3.

	cw[5] 2x1 mux	**cw[4]** lap register	**cw[3]** mod10 reset	**cw[2]** mod10 count	**cw[1:0]** timer counter
	0 = mod10	1 = load	1 = reset	1 = count up	11 = load
	1 = register	0 = hold	0 = hold	0 = hold	10 = count up
					01 = not used
					00 = hold
RESET				0	
STOP					
S2RES					
S2R					
RUN					
R2LR	1				
R2S					
INC					
LAPRUN	1				10

LR2R					
LR2LS					
LAPINC					
LAPSTOP			0		
LS2R					
LS2LR					

Verilog code for stopWatchControl

After you complete the control word table, you are ready to write the Verilog for the control unit. This file will have the following main sections.

- Port description – This has been provided to you.
- Control word values – This is a set of localparam statements, one for each state. You will define the control word output for each state. This will include all the control words that you derived in the previous lab, plus some new control words for the intermediate states. For example, the following is the control word for the `STOP` state.

```
localparam STOP_CW = 6'b000000;
```

- State codes – Each state needs to be assigned a unique binary value. It does not matter what code you assign which state. These codes are mostly invisible. That said, you will want them handy when performing the simulation so that you know which state the control unit is in. For example, the following is the state code that I used for the `STOP` state. Note, your codes can be different.

```
TOP_STATE = 4'b0010,
```

- Reset logic – this has been provided to you.
- Output logic – This is an always/case statement that has one case for each state and simple associated the control word output with the appropriate control word for the state that the FSM is currently in. For example, the following is the case statement that I used to associate the `STOP` state control word with the `STOP` state code.

```
STOP_STATE: cw = STOP_CW;
```

- Next state logic – This is an always/case statement that has one case for each state. It embodies the logic in Figure 10.3 using if/then statements. Let's redraw Figure 10.3 by focusing on the states connected to the STOP state by transition arcs in Figure 10.5.

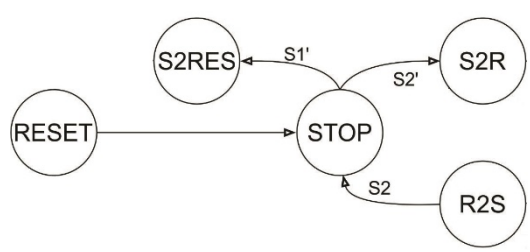

Figure 10.5: All the states and with a transition arc connected to the `STOP` state.

The next state logic for the `STOP` state embodies the two transition arcs leaving the `STOP` state in Figure 10.5. If the FSM is in the `STOP` state and the `S1` input equals `1` then the FSM should go to the `S2RES` state. This logic and the transition to the state `S2R` is provided in the

```
STOP_STATE:
    begin
        case({S2,S1})
            2'b10: nextstate = S2RES_STATE;
            2'b01: nextstate = S2R_STATE;
            default: nextstate = STOP_STATE;
        endcase
    end
```

following code snippet. You must specify every possible next state, even when the next state does not change. Thus, I prefer to use a case statement and leave the default case to be when the next state is equal to the current state.

When writing code for the control unit, I want you to:

- Use the **controlUnit.v** file provided in the Canvas folder as the starting point.
- Provide meaningful names to the wires in the module.
- Properly tab-indent your code. You can use View -> Show White Space
  - Single level for wire declarations
  - Single level for component instantiations
  - Two levels for case statement
  - Three levels for case values

Compile the Verilog code for the control unit, look for and remove the errors. When the control unit compiles cleanly, it's time to simulate to check that it behaves correctly.

10.4 Testbench

This lab will terminate with an extensive simulation of the stopwatch to uncover as many bugs as possible. Errors are much, much easier to find in a simulation. The goal of this simulation is to cover every transition arc in Figure 10.3 so that you can be sure your code is working correct.

The timing diagrams shown in Figure 10.6 show the tenths, `S1` and `S2` signals as they are manipulated by the testbench. These signals will affect the state of the control unit according to Figure 10.3. Your task is to use these signals to determine what the state the control unit is in.

The goal of the testbench was to cover every transition arc in Figure 10.3. This goal was not achieved; one transition arc was not taken in the testbench, which one was it?

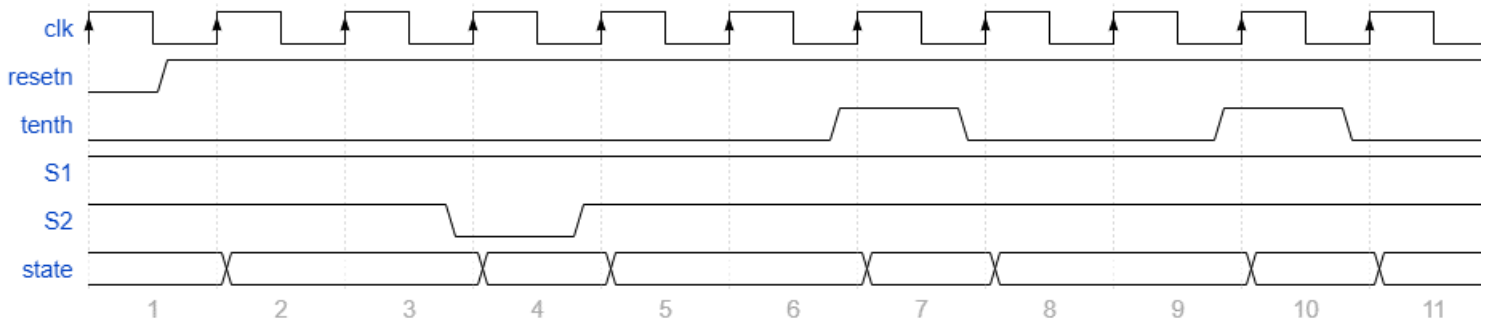
clk
resetn
tenth
S1
S2
state
1
2
3
4
5
6
7
8
9
10
11

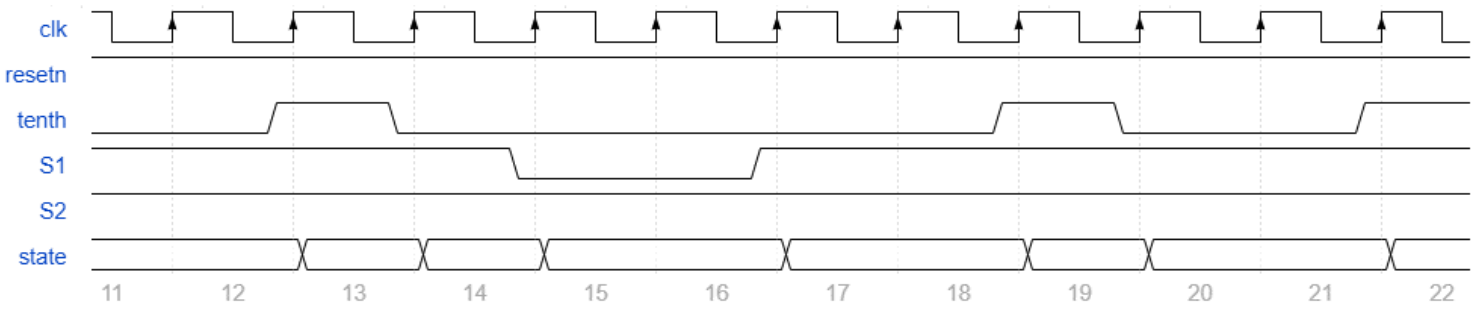
clk
resetn
tenth
S1
S2
state
11
12
13
14
15
16
17
18
19
20
21
22

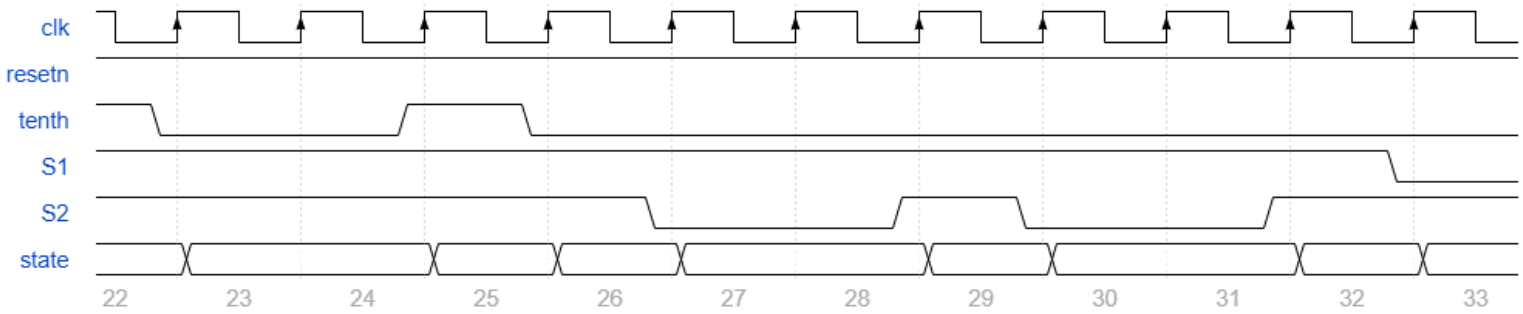
clk
resetn
tenth
S1
S2
state
22
23
24
25
26
27
28
29
30
31
32
33

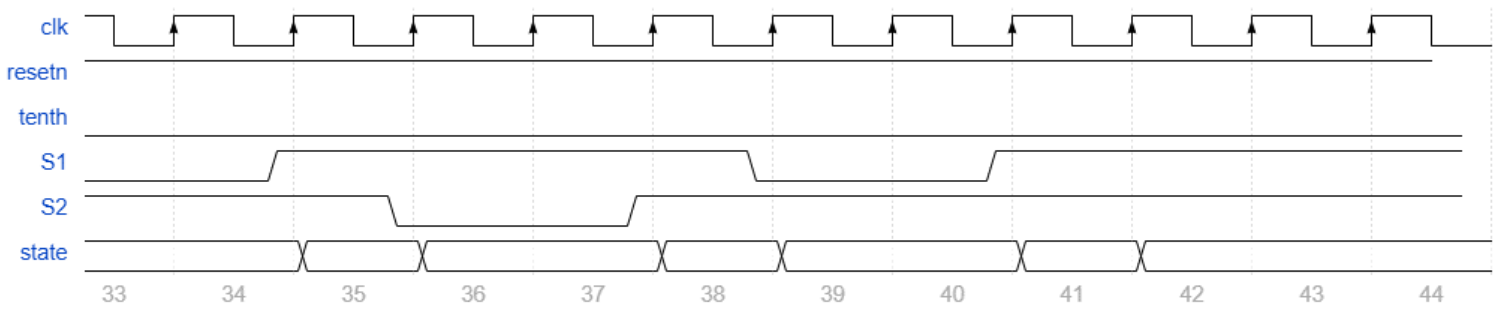

Figure 10.6: Timing diagram for the testbench for the testbench simulation

.

Listing 10.1: Creating alias' for the binary codes of states in the do file uses requires knowing the binary code of each state, the name of each state and the color for each state.

```
radix define States {
        ...
   4'b0010 "STOP"    -color red,
        ...
   -default hex
   -defaultcolor white
}
```

Now that you have an understanding of what the testbench should do, it's time to run the simulation. Complete the provided do file to simplify testing your control unit. Your timing diagram should have the following waveforms.

signal radix	trace color	
clk	default	green trace
resetn	default	green trace
cw	hex	yellow trace
tenth	default	orange trace
S2	default	orange trace
S1	default	orange trace
states		
	stop/stop2reset/reset/stop2run	red trace
	run/inc/run2lapRun/run2stop	yellow trace
	lapRun/lapInc/lapRun2run/lapRun2lapStop	orange trace
	lapStop/lapStop2run/lapStop2LapRun	green trace

When editing the do file for this lab, note the following.

- Correct the waveform names as needed. This might happen if you name a signal differently than I did.
- Create alias' for each state code. When you coded the control unit by assigning an arbitrary 4-bit value to each state. In Listing 10.1 you will associate each of these 4-bit values to a string and a color. The string should correspond to the name of the state and the color to something identifiable when the simulation is running. For example, you may remember that I assigned `STOP_STATE = 4'b0010`. This corresponds to the line "4'b0010 "STOP" -color red," in Listing 10.1
- This will produce a much more meaningful representation like that shown in Figure 10.7 of the state when you run the simulation.

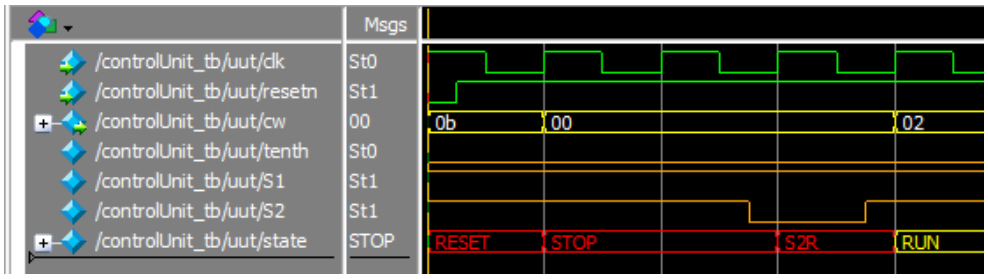

Figure 10.7: A small segment of the testbench simulation showing how Listing 10.1 encodes state names.

Run the entire simulation and compare the simulation output to Figure 10.6. Use the results of the simulation to either correct Figure 10.6 or to correct your **controlUnit.v** code.

10.5 Turn in

You may work in teams of at most two. Make a record of your response to the items below and turn them in a single copy as your team's solution on Canvas using the instructions posted there. Include the names of both team members at the top of your solutions. Use complete English sentences to introduce what each of the following listed items (below) is and how it was derived. In addition to this submission, you will be expected to demonstrate your circuit at the beginning of your lab section next week.

Control Unit Design

- Completed Table 10.1.
- Completed Figure 10.6.
- Verilog code for the control unit in Section 10.3. Only include Verilog code for the body of the control unit module (courier 8-point font single spaced) - leave out header comments.

Control Unit Simulation

- Timing diagram of control unit simulation .
- Demonstrate your simulation to a member of the lab team.